XQ-65C
6.5 Inch 2-Way Car Component Speaker
1"Voice Coil 4Ohm

SPECIFICATIONS

General Data				Unit
Type		**Woofer**	**Tweeter**	
Overall Dimensions		165.3*165.3*58mm	45.2mm	mm
Nominal Power Handling		50	20	W
Transient Power 10ms		100	40	W
Sensitivity		88	89	db
Frequency Response		60-10K	2500-20K	Hz
Cone Meterial		Paper	Silk	
Net Weight		0.773	0.048	kg
Electrical Data				
Nominal Impedance		4	4	Ohm
DC Resistance		3	3.2	Ohm
Voice coil and Magnet Parameters				
Voice Coil Diameter		25.5	20.4	mm
Voice Coil Height		8.6	2	mm
HE Magnetic Gap Height		4	2	mm
Max.Linear Excursion		2	1	mm
Voice Coil Bobbin		Kapton	Aluminium	
Voice Coil Wire		SV	CCAW	
Number Of Layers		2	2	
Magnet System Type		High Flux Ferrite	Neodymium	
BL Product		4.031	0.9	T
T-S Parameters				
Suspension Compliance	Cms	666.110u		M/N
Mechanical Q Factor	Qms	5.61		
Electrical Q Factor	Qes	0.786		
Total Q Factor	Qts	0.69		
Moving Mass	Mms	12.076		g
Eq.Cas Air Load(liters)	Vas	18.257		Ltr
Resonant Frequency	Fs	56		Hz
Effective Piston Area	SD	13.893m		M
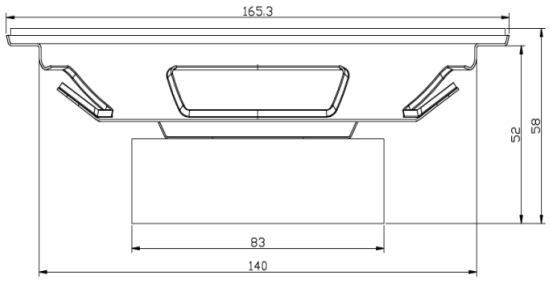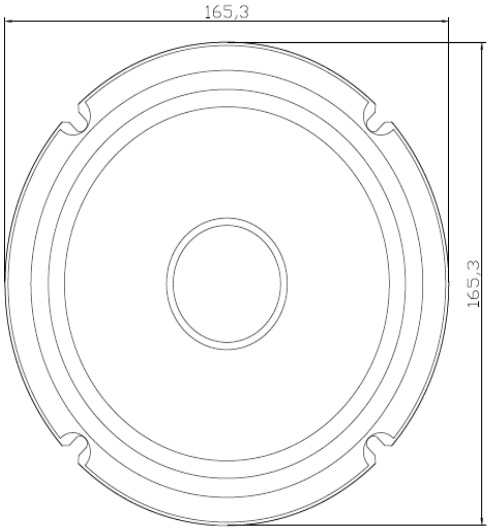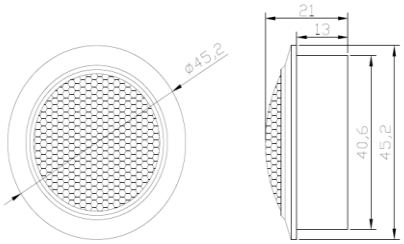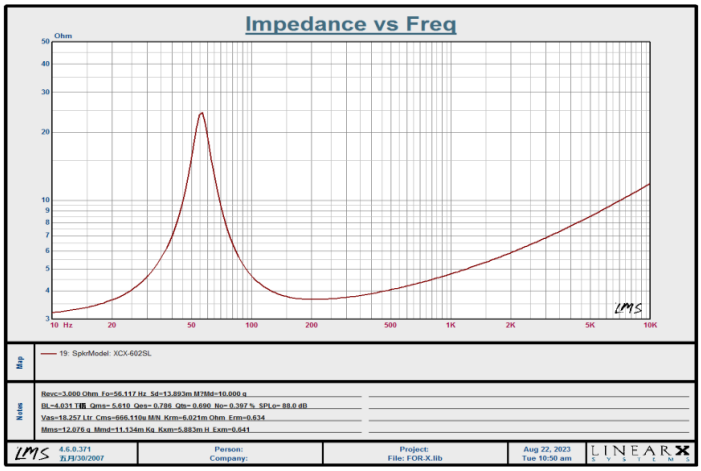
Dimensions