FOR-X®

Owner's Manual

XQ-70.8PP

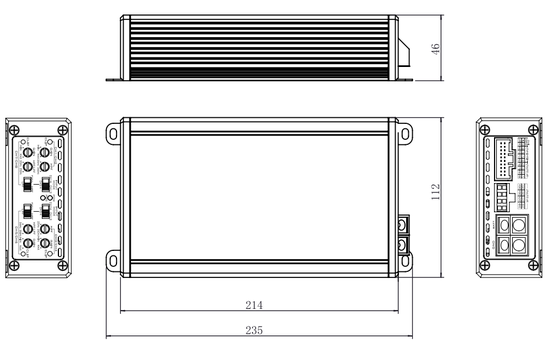

FEATURES

- 2 Layers PCB
- Stable and Reliable Circuit Design
- Small Size Footprint for Easy Installation
- Surface Mount Component Technology
- Audio Precision Quality Control Verification
- Direct Insert Power and Speaker Terminals
- Short Circuit, Thermal, and Voltage Protection

SPECIFICATIONS

RMS power @4 ohm	70W*8 @ THD ⩽1%
RMS power @ 2 ohm	120W*8 @ THD < 1%
RMS power @1 ohm	/
RMS power @ 4ohms bridge	200W*2@THD ⩽1%
Amplifer Type	CLASS D
Minimum Load Impedance	2ohm
Input Sensitivity	1.1V @ GAIN at max
High Pass Filter	25Hz-250Hz
Low Pass Filter	35Hz-350Hz
Subsonic Filter	/
Bass Boost	/
Frequency Response	25Hz-22KHz
Signal to Noise Ratio	97dB
THD @ 4ohm	0.10%
Damping Factor	>120
Working Voltage	9-16V
Fuse Rating	/
Dimension[Lx WxH] (inch)	9.25x4.5x1.81

CONTROL FUNCTIONS

1. CLIP LED
   When the LED illuminates yelloow, the output of amp is distorted.
2. High Pass - This control can filter out unwanted low frequency
   HPF VOL MAX50HZ-20KHZ:
   HPF VOL MIN:25HZ-20KHZ
3. Input mode
   When it CH1/2, CH5&CH6&CH7&CH8 input CH1/CH2
   When it CH3/4, CH5&CH6&CH7&CH8 input CH3/CH4
   When it CH1-4, CH5&CH6 Bridged CH7&CH8 Bridged input CH1+CH2+CH3+CH4
4. POWER / PROTECT LED- The POWER LED illuminates red when the amp is switched on.
   When the amp is in short circuit or thermal protection, the PROTECT LED is on. You need to check the amplifier or wait for the amplifier temperature to cool down before restarting.
5. Gain Control (INPUT LEVEL) - The gain control matches the input sensitivity of the amplifier to the source unit being used. The operating range varies from1.1V.
   Adjusting the gain:
   Step 1: Turn the gain control on the amplifier all the way down (counter clockwise).
   Step 2: Turn up the volume control on the source unit to approximately 3/4 of maximum.
   Step 3: Adjust the gain control on the amplifier until audible distortion occurs.
   Step 4: Adjust the gain control down until audible distortion disappears.
   Step 5: The amplifier is now calibrated to the output of the source unit.
6. Crossover Selector
   Select the type of crossover setting you would like to run on,Low pass filter(LPF),Full, or high pass filter(HPF)
7. FILTER Mode and FREQ Control-These controls allow control over the frequencies played for the rear channels. There is an option for Low Pass, Full Range, or High Pass. In LP or HP mode, Low Pass X-Over Frequency Control - Use this to select the desired low-pass (LP) x-over frequency. The frequency is adjustable from 35Hz to 350Hz.
8. Ground Terminal- A proper ground is required for your amplifier to operate at peak performance. A short ground cable the same diameter as the power cable must be used to attach the ground terminal directly to the chassis of the vehicle. Always remove paint, dirt or debris to expose bare metal where the ground will be attached. ntenna".
9. Power Terminal (+12V) - This is the main power input for the amplifier and must be connected directly to the positive terminal of the vehicles battery for proper operation. Use caution when installing (+12) power cable in the vehicle. Avoid running this cable parallel with RCA cables, antennas, or other sensitive equipment due to massive currents that can induce noise into the audio system It is also very important to have a tight, secure connection for maximum performance. We recommends using 4AWG wire with the amplifier.
10. CH5/CH6/CH7/CH8 OUTPUT
11. CH1/CH2/CH3/CH4 INPUT&OUTPUT / POWER INPUT
    Connect speakers to these terminals, Observe speaker polarity throughout the system. Improper phase can result in loss of bass response and/or poor overall sound quality.
    POWER INPUT

