XMD-1316

6.5 Inch Midrange Speaker

1.5 Inch Voice Coil 4Ω

FOR-X®

SPECIFICATIONS

General Data		Unit
Overall Dimensions	165mmx78mm	mm
Nominal Power Handling	70	W
Maximum Power	160	W
Sensitivity	92	db
Frequency Response	115-15 k	Hz
Cone Material	Paper Cone	
Basket	Steel	
Net Weight	1.48	kg
Electrical Data		
Nominal Impedance	4	ohm
DC Resistance	3.2	ohm
Voice Coil and Magnet Parameters		
Voice Coil Diameter	38.6	mm
Voice Coil Height	7.5	mm
HE magnetic Gap Height	5	mm
Voice Coil bobbin	Kapton	
Number of Layers	2L	
Magnet System Type	Ferrite	
T-S Parameters		
Suspension Compliance	0.18	Cms
Mechanical Q Factor	11.78	Qms
Electrical Q Factor	0.73	Qes
Total Q Factor	0.69	Qts
Moving Mass	10.5	Mms
Eq.Cas AIR Load	4.8	Vas
Resonant Frequency	115	Fs
Effective Piston Area	136.8cm^2	SD

FEATURES

* Steel Basket
*21 Oz High Flux Ferrite Magnet System
* 1.5" Voice Coil
* 160 Watts Peak Power Handling
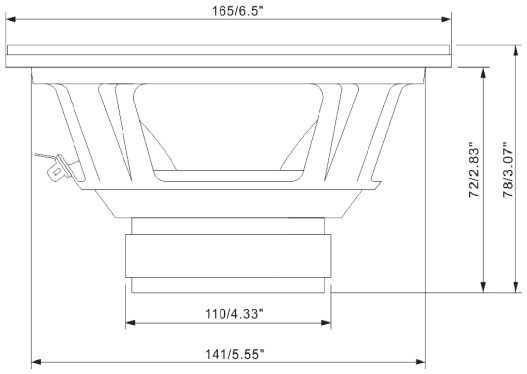
Dimensions